GAS BURNER E2 V

MODULAR FIRE E

VERTICAL VERSION

- FOR PROFESSIONAL SECTOR
- HIGH-EFFICIENCY DIVERTER FLAME
- A.F.S. SYSTEM FOR VARIOUS HEIGHTS OF FLOOR
- PROFESSIONAL VALVE GROUP

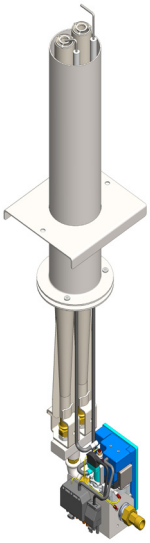

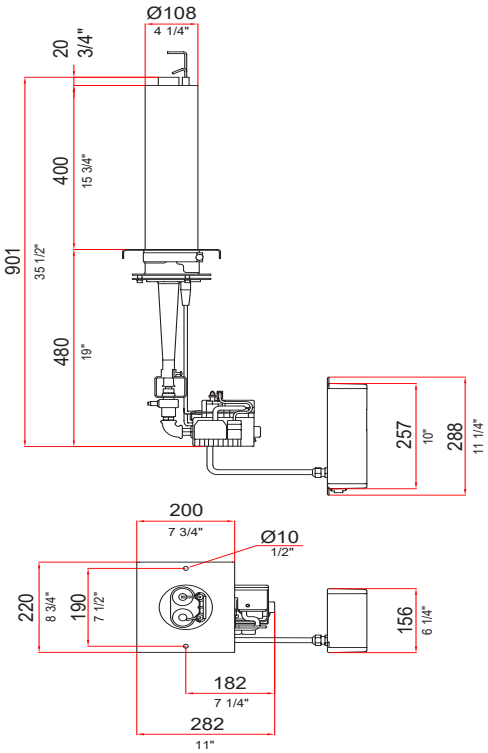

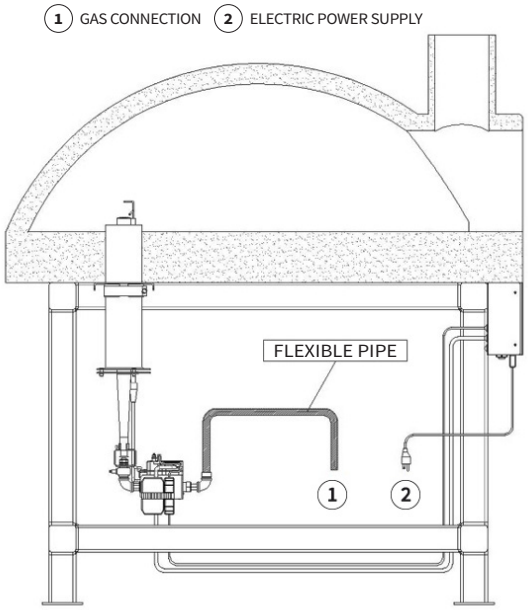

GAS BURNER SERIES E (VERTICAL VERSION)

MODEL **E2 V**	NATURAL GAS	LPG	LPG - BOTTLE
Thermal output Min-Max • Kw	12,0 - 22,0	10,5 - 22,0	OPERATION WITH GAS BOTTLE ≥ 2 x 15 Kg LPG
Thermal output Min-Max • BTU	40.945 - 75.067	35.827 - 75.067	
Inlet pressure • mbar	20,0	30,0	
Inlet pressure • W.C.	8,02	12,04	
Gas connection	1/2"	1/2"	
Consumption Min-Max • m^3/h	1,27 - 2,38		
Consumption Min-Max • Kg/h		0,83 - 1,74	
Net weight	15 Kg	15 Kg	

FLOW RATE

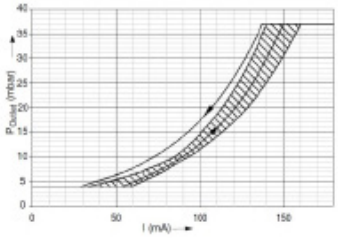

2019_10_16_ModularFire_E_DataSheet_GB

by **UNITECH S.r.l.**
Via Ferrari, 27/71 - 41043 Corlo di Formigine (MO) - Italy
Tel. +39 059 574161 - Fax +39 059 5771294
P.IVA - VAT IT03894120363
info@uni-tech.it - **www.uni-tech.it**

uni food equipment
www.modularfire.it